Tyco Electronics

308 Constitution Drive
Menlo Park, CA 94025-1164
Phone: 800-227-4856
www.circuitprotection.com

PolySwitch® PTC Devices

Overcurrent Protection Device

Raychem Circuit Protection Products

PRODUCT: TSL250-080F-B-0.5

DOCUMENT: SCD 26291
PCN: E07878-000
REV LETTER: B
REV DATE: MAY 8, 2007

Specification Status: RELEASED

Max Electrical Rating at 20°C

Operating Voltage: **$80V_{DC}$**
Fault Voltage: **$250V_{RMS}$**
Interrupt Current: **$3A_{RMS}$**

Terminal Material: Tin plated brass

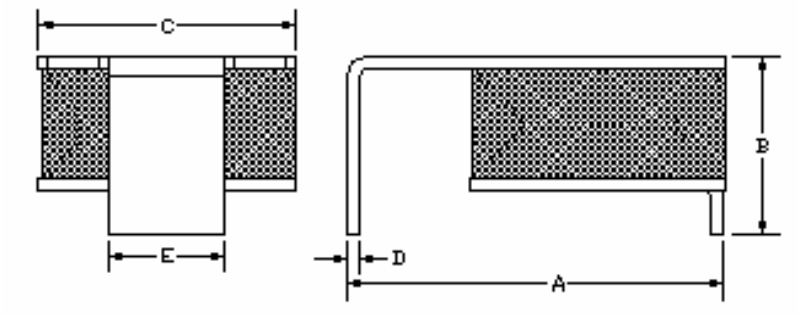

Marking:

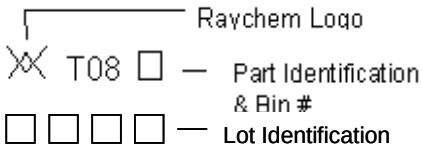

TABLE I. DIMENSIONS:

	A		B		C		D		E	
	MIN	MAX	MIN	MAX	MIN	MAX	MIN	MAX	MIN	MAX
mm*:	6.7	7.9	2.7	3.7	4.8	5.3	0.2	0.4	2.5	3.1
in:	(0.265)	(0.310)	(0.110)	(0.145)	(0.190)	(0.210)	(0.008)	(0.015)	(0.100)	(0.120)

*Rounded off approximation

TABLE II. PERFORMANCE RATINGS @ 20°C (unless otherwise noted):

IHOLD (A)		RESISTANCE (Ohms)			TIME TO TRIP (s) @ 1A	OPERATING Temperature (°C)		Tripped State Power Dissipation (W)
20°C	70°C	R MIN	R MAX	R_1 MAX*	TYP	MIN	MAX	Typical
0.080	0.044	5.0	11.0	20.0	0.8	-40	85	1.2

* Maximum device resistance at 20°C measured 1 hour post trip or 24 hours post reflow.

Additional Ratings @ 20°C

Resistance Matched 0.5 Ohm

Lightning Withstand Per Telcordia GR1089 Intrabuilding
2hits 2/10μsec, 1500V, 100A

Agency Recognition: UL, CSA, TUV
Reference Documents: PS300
Precedence: This specification takes precedence over documents referenced herein.
Effectivity: Reference documents shall be the issue in effect on the date of invitation for bid.
CAUTION: Operation beyond the rated voltage or current may result in rupture, electrical arcing or flame.

Materials Information

ROHS Compliant — Directive 2002/95/EC Compliant

ELV Compliant — Directive 2000/53/EC Compliant

Pb-Free

© 2005, 2007 Tyco Electronics Corporation. All rights reserved.